KEY
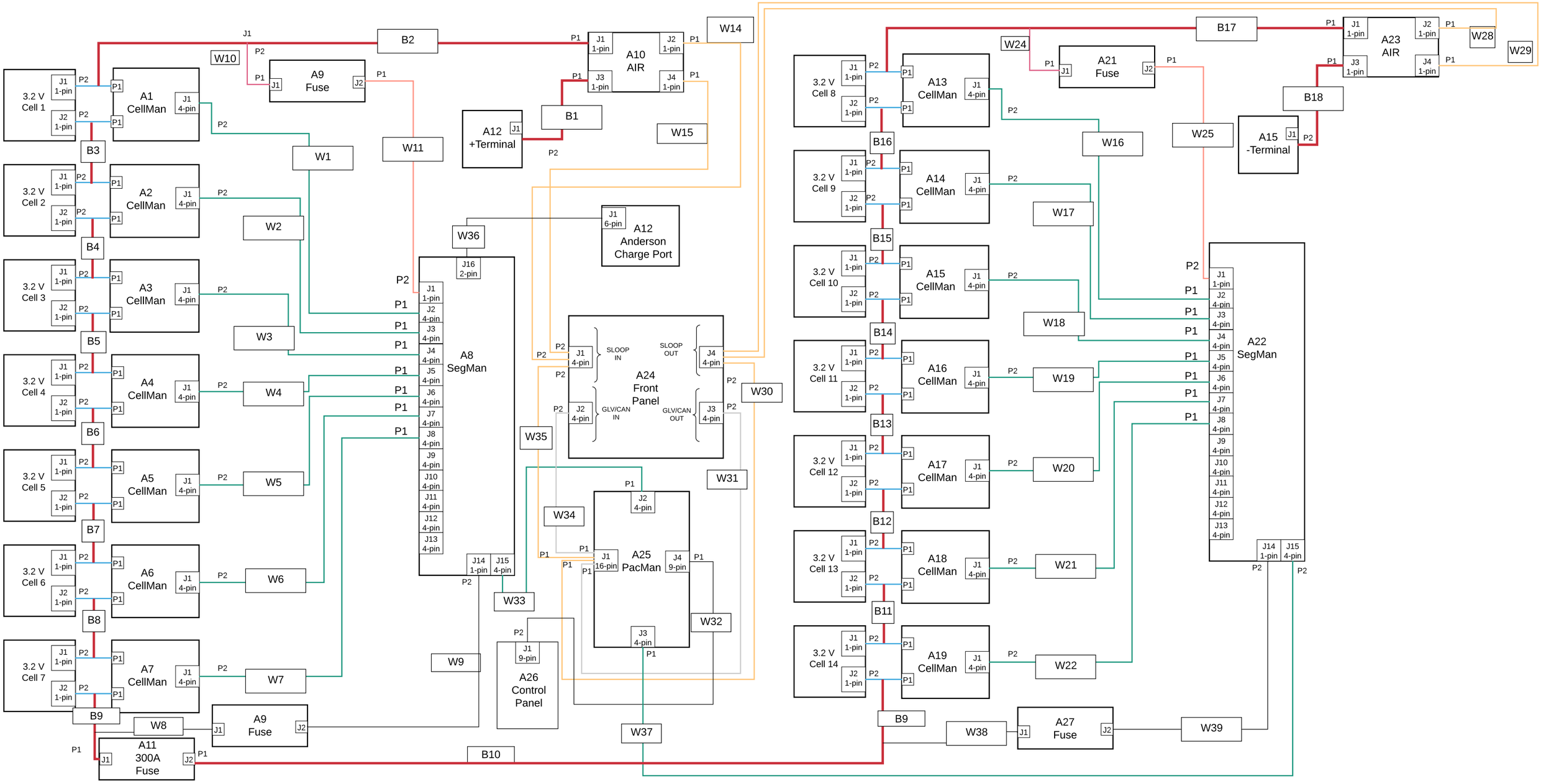
COLOR	LABEL	DESCRIPTION	CONNECTOR
RED	B1 - B5	HIGH CURRENT PATH	BUS BAR
GREEN	W1 - W7	COMMUNICATION PROTOCOL	RIBBON CABLE
TAN	W14 - W15 W28 - W31 W35	SAFETY LOOP	16 AWG CABLE