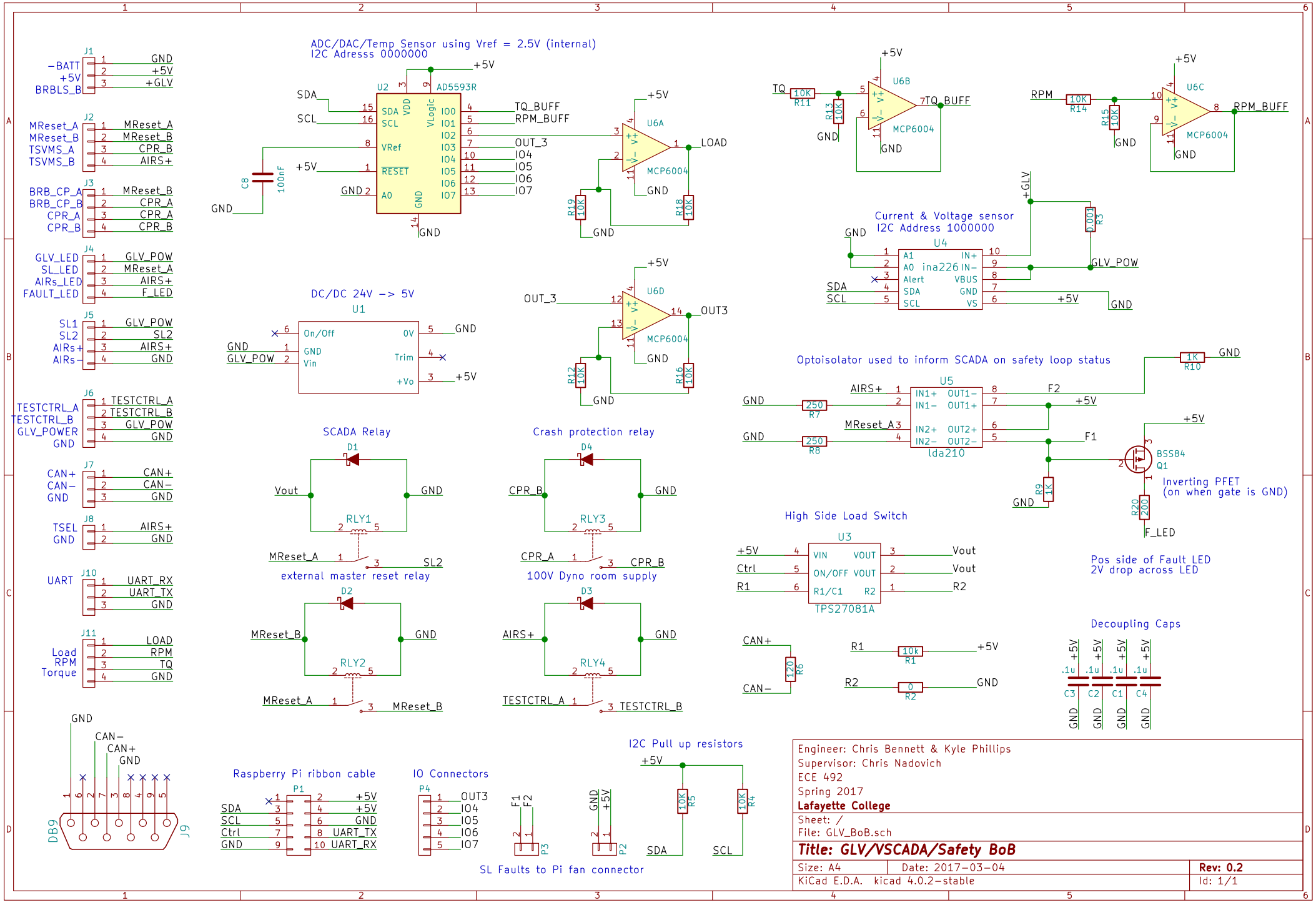

Engineer: Chris Bennett & Kyle Phillips
Supervisor: Chris Nadovich
ECE 492
Spring 2017
Lafayette College
Sheet: /
File: GLV_BoB.sch

Title: GLV/VSCADA/Safety BoB

Size: A4	Date: 2017-03-04	Rev: 0.2
KiCad E.D.A. kicad 4.0.2-stable		Id: 1/1