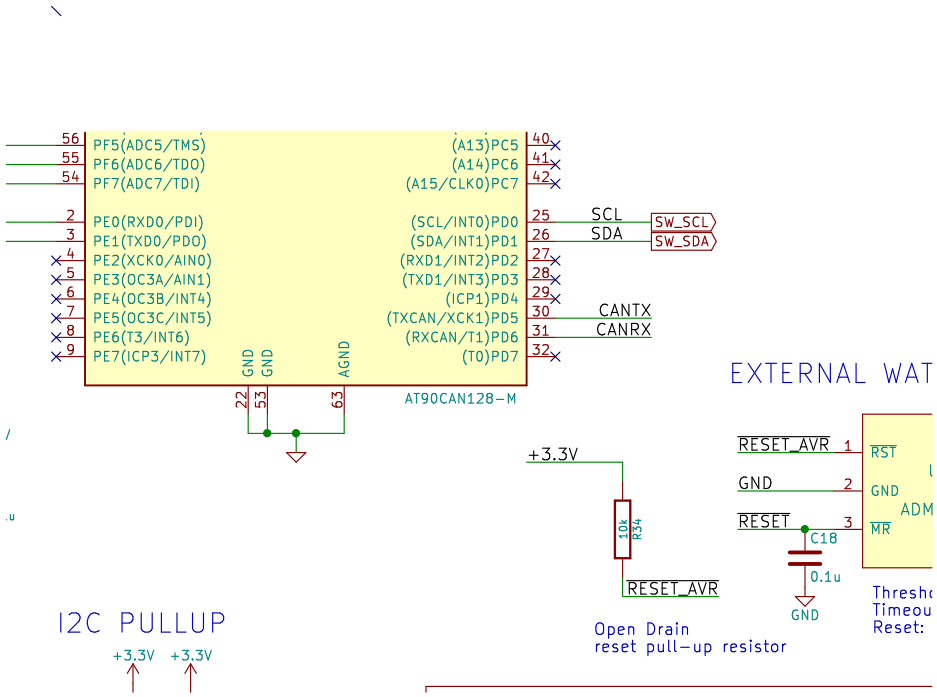

You created this PDF from an application that is not licensed to print to novaPDF printer (http://www.novapdf.com)

HIGH VOLTAGE INTERFACES

BATT+ BATT+
PACK+ PACK+
PACK− PACK−
LOW_DET LOW_DET
CHRG_DET CHRG_DET
SDA_HV SDA_HV
SCL_HV SCL_HV
5V_AMPS 5V_AMPS
CURRENT_HV_1 AMPS_1
CURRENT_HV_2 AMPS_2

PWR_FLAG
HV_GND PACK−
PWR_FLAG
5V_HV

HIGH VOLTAGE POWER

This power supply is responsible for delivering non−isolated 5V power to the high voltage electronics. All AMS bus connected devices are powered from this regulator. Maximum current draw 250mA. This Switcher was selected for its high efficiency even at light load.

PACK+ — F1 5 A — D5 SK310A−LTP — HV_PWR
PWR_FLAG
HV_PWR — R13 1.1k — C10 220u — C11 1u — HV_GND

U6 LTC3638 (350uA)
Vin, SW, RUN, VFB, OVLO, SS, VPRG2, VPRG1, GND, GND, GND
SW — L1 220u — 5V_HV
VFB — R14 1k
SS — C15 10u — C12 10u
VPRG1 — D6 SK310A−LTP — 5V_HV
GND — HV_GND

5V_HV — 5V_HV
AMS_RESET — AMS_RESET

HIGH VOLTAGE | LOW VOLTAGE

PWR_FLAG PWR_FLAG
+5V
GND

SDA — SDA
SCL — SCL

PACK VOLTAGE SENSOR AND CHARGE SENSOR

PACK+ — R3 0.001 1% — BATT+
5V_HV — U4 INA_226 (VS, ALERT, VBUS, IN+, IN−, GND, A1, A0, SDA, SCL) — HV_GND
SDA_HV
SCL_HV

I2C Address 0x44
(see datasheet page 18)
Additional documentation of the use of this component is req'd.

5V_HV — Bypass Capacitor (U4) C23 0.1u, C8 0.1u — HV_GND
5V_HV — Bypass Capacitor (U5)

I2C Address 0x48
(see datasheet page 14)

U5 ADS1115 (AIN0, AIN1, AIN2, AIN3, VCC, GND, ADDR, RDY, SDA, SCL)
AMPS_1
AMPS_2
ADDR — HV_GND
RDY — not connected
SDA — SDA_HV
SCL — SCL_HV
HV_GND

I2C PULLUP

5V_HV — 1mA — R19 1k — SDA_HV
R20 1k — SCL_HV

I2C ISOLATOR

U8 Si8600 (ISO, OPTO)
5mA: VDD1, SDA1, SCL1, GND1
5V_HV
SDA_HV
SCL_HV
HV_GND
C14 0.1u, C25 0.1u, C13 0.1u
5mA: VDD2, SDA2, SCL2, GND2
+3.3V
SDA
SCL
GND
C17 0.1u

HIGH VOLTAGE DIGITAL I/O

This I/O expander is responsible for relaying digital signals accross the HV−LV isolation barrier via the I2C bus.

I2C Address 0x40
(see datasheet page 13)

5V_HV — R10 10k
U3 PCF8574A (P0, P1, P2, P3, P4, P5, P6, P7, VDD, VSS, SCL, SDA, A0, A1, A2, INT)
CHRG_DET
AMS_RESET
LOW_DET
SCL — SCL_HV
SDA — SDA_HV
A0 — HV_GND
A1 — HV_GND
A2 — HV_GND
INT — not connected
VSS — HV_GND
VDD — 5V_HV

Q4 RRR015P03TL
5V_AMPS
5V_HV
R11 10k — 5V_HV

5V_HV — C22 Bypass Capacitor (U3) 0.1u — HV_GND

HIGH VOLTAGE | LOW VOLTAGE

U7 NCS6S1205C
HV_PWR — C9 10u — HV_GND
VIN+, VIN+, VIN−, VIN−, VOUT+, VOUT−, NC

D9 SK310A−LTP — +5V
C16 220u, C24 0.1u, D20 NZH5V1B

3.3V Linear Regulator
U9 NCP1117ST33T3G (VI, GND, VO)
+5V — +3.3V
C27 10u — GND

The flyback regulator responsible for delivering 5V isolated power to low voltage systems has been replaced with an isolated DC/DC converter. This is due to the insufficient output current (300mA) available when assembled. Cost is comparable.

Maximum Current Draw on 5V output: 1.2A

DEVELOPMENT ONLY
Engineer: Preston Bejabeng
Supervisor: Christopher Nadovich
Fall Semester 2016
Lafayette College
Sheet: /Isolated Power Supply/
File: power.sch

Title: Battery Pack Management Computer

Size: USLetter | Date: 2016−12−13 | **Rev: 0.8**
KiCad E.D.A. kicad 4.0.2−stable | Id: 2/6

You created this PDF from an application that is not licensed to print to novaPDF printer (http://www.novapdf.com)

SAFETY_CTRL — SLOOP_CTRL
CHARGE_CTRL — CHRG_CTRL
FAN_CTRL — FAN_CTRL
SLOOP_DET — SLOOP_DET

SAFETY LOOP RELAY

This relay is responsible for switching the PACMAN safety loop connection ON/OFF. The lights show the user at a glance if the safey loop is open or closed.

This relay is capable of switching 8A.
The SLOOP_CTRL signal is active low.

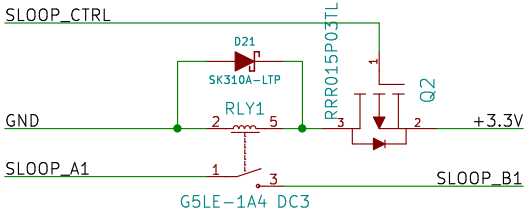

GROUNDED LOW VOLTAGE

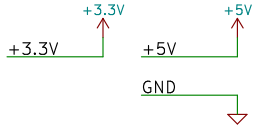

A1 and B1 pins are shorted together only when the safety loop is not opened by this board.

Voltage between A3 and A4 greater than 0 means the safety loop is not opened by any other component in the system.

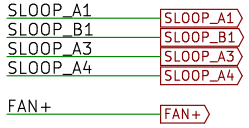

OPTO-ISOLATOR ON SL CLOSED SIGNAL

This device provides a galvanically isolated signal to the microcontroller to let it know the safety loop is closed in all components. The HV current sensor is enabled as a result. This mean the AIRs should be closed if functional.

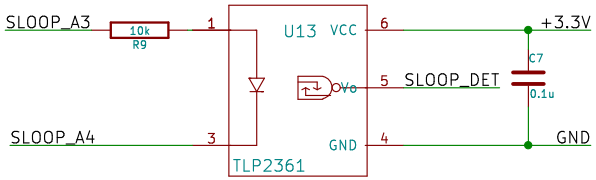

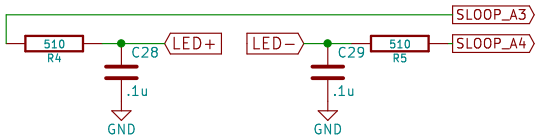

CHARGE CONTROL P-FET

This MOSFET is responsible for connecting the CHARGE relays when the pack charger has been connected. Power is supplied from either the pack terminals, or USB connector.

Coil Output Voltage: 5V

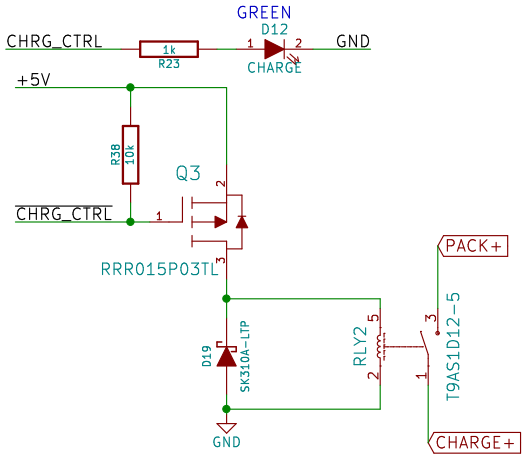

HIGH SIDE P-FET DRIVER

This device is responsible for driving the high side p-fet switches.

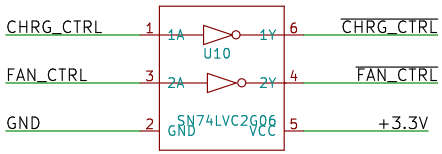

FAN CONTROL P-FET

This MOSFET is responsible for switching the charge fan ON/OFF.

The fan will not come on automatically when charging begins, it is controlled by the software.

Fan Output Voltage: 5V

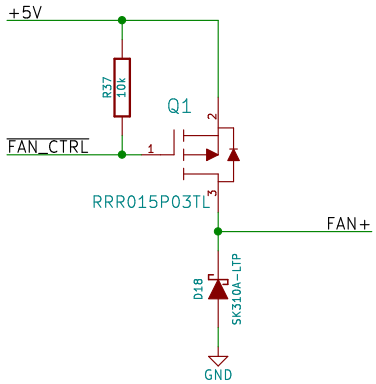

DEVELOPMENT ONLY	
Engineer: Preston Bejabeng	
Supervisor: Christopher Nadovich	
Fall Semester 2016	
Lafayette College	
Sheet: /Safety Loop Wiring/	
File: safety_loop.sch	
Title: Battery Pack Management Computer	
Size: USLetter | Date: 2016-12-13	**Rev: 0.8**
KiCad E.D.A. kicad 4.0.2-stable	Id: 3/6

You created this PDF from an application that is not licensed to print to novaPDF printer (http://www.novapdf.com)

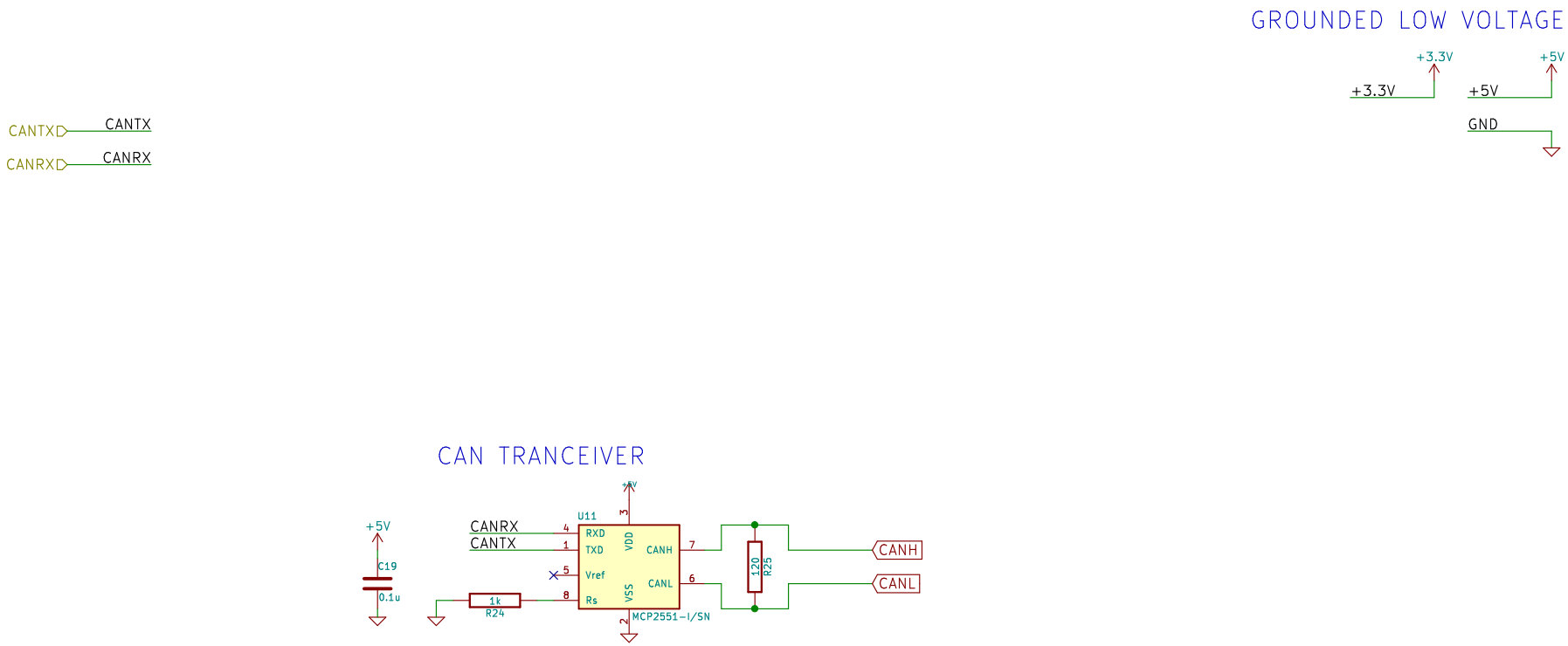

NOTE: DO NOT populate R25.

R25 provides the ability to use this board
as a terminating CAN node in development only.

DEVELOPMENT ONLY
Engineer: Preston Bejabeng
Supervisor: Christopher Nadovich
Fall Semester 2016
Lafayette College

Sheet: /CAN Transceiver/
File: can_xcvr.sch

Title: Battery Pack Management Computer

Size: USLetter	Date: 2016-12-13	**Rev: 0.8**
KiCad E.D.A. kicad 4.0.2-stable		Id: 4/6

You created this PDF from an application that is not licensed to print to novaPDF printer (http://www.novapdf.com)

GROUNDED LOW VOLTAGE

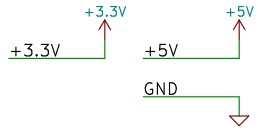

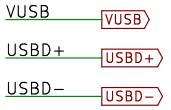

USB BOOTSTRAP POWER

This diode is used to power the PACMAN computer board when the battery pack has been fully discharged. If voltage is not present between PACK+ and PACK−, then this diode will allow the USB port to supply up to 500mA of sustained current. For periods less than 0.1 seconds, 1A can be drawn.

USB UART

This is an FTDI USB Serial Converter IC, it can be used to upload code, configure the device, or transfer debugging information if the software is configured properly.

Drivers available for Windows, Mac OS & Linux

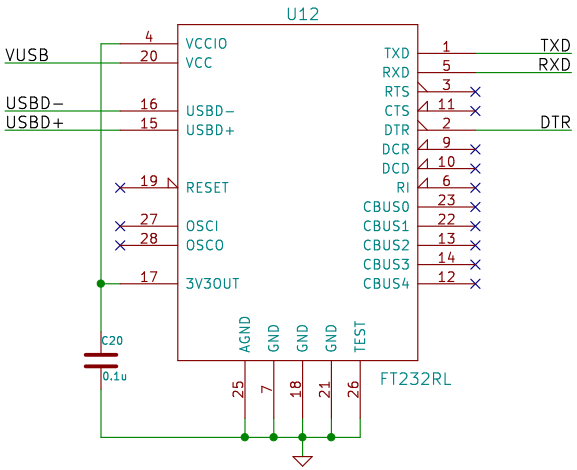

FTDI Reset Connection

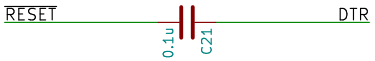

DEVELOPMENT ONLY
Engineer: Preston Bejabeng
Supervisor: Christopher Nadovich
Fall Semester 2016
Lafayette College

Sheet: /FTDI USB UART/
File: ftdi_uart.sch

Title: Battery Pack Management Computer

Size: USLetter	Date: 2016-12-13	**Rev: 0.8**
KiCad E.D.A. kicad 4.0.2-stable		Id: 5/6

You created this PDF from an application that is not licensed to print to novaPDF printer (http://www.novapdf.com)

HIGH VOLTAGE

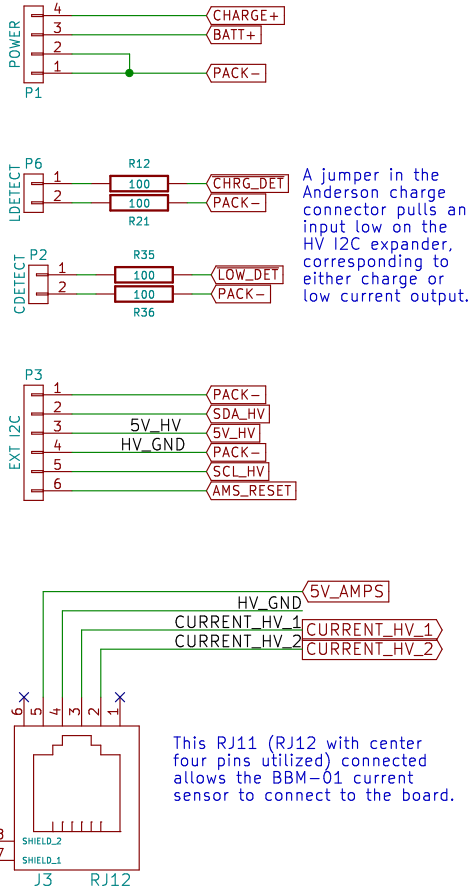

A jumper in the Anderson charge connector pulls an input low on the HV I2C expander, corresponding to either charge or low current output.

This RJ11 (RJ12 with center four pins utilized) connected allows the BBM−01 current sensor to connect to the board.

USB UART

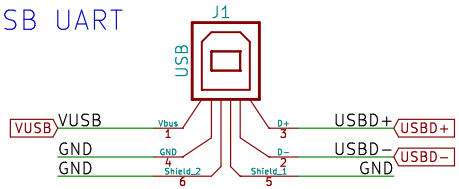

PACK WIRING HARNESS APPLICATION NOTE

Port J2 is a DB−37 backplane connector, which will be connected to the pack wiring harness via solder pot connections. The wiring of this connector, and its inputs/outputs are described in more detail in the pack wiring diagram.

GPIO HEADER

0.1" IDC Connector
External User Interface Board

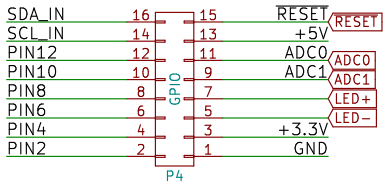

This connector contains pins for I2C communication with the LCD screen, input from control panel push buttons, and to illuminate the pack alile LED. . If, at a later time, more complicated LCDs, or more I/O is required these pins can be utilized.

GROUNDED LOW VOLTAGE

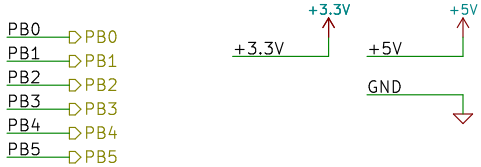

SAFETY LOOP A/B

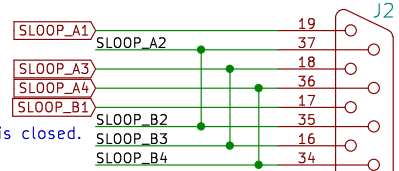

SLOOP_A1 and SLOOP_B1 pins are shorted together only when the safety loop is closed.

Pins in these sections are connected to obsolete signals in the test stand. They may be used, but the test stand must be updated as well.

FAN

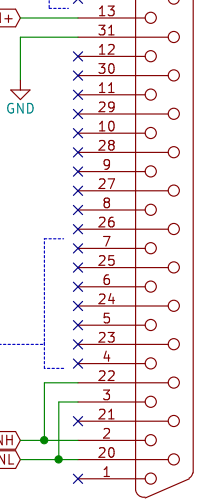

GLV HARNESS

I2C PULLUP

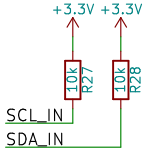

AVR DEBUGGING

JTAG Programming/Debug Header

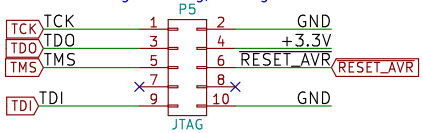

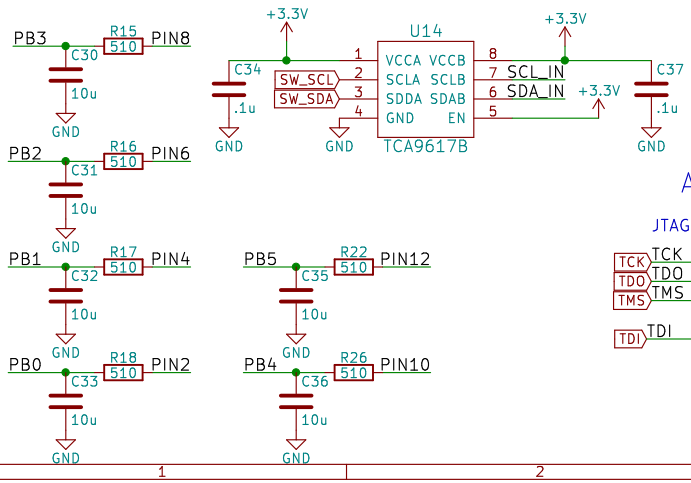

DEVELOPMENT ONLY	
Engineer: Preston Bejabeng	
Supervisor: Christopher Nadovich	
Fall Semester 2016	
Lafayette College	
Sheet: /External Connectors/	
File: connectors.sch	
Title: Battery Pack Management Computer	
Size: USLetter | Date: 2016−12−13	**Rev: 0.8**
KiCad E.D.A. kicad 4.0.2−stable	Id: 6/6

You created this PDF from an application that is not licensed to print to novaPDF printer (http://www.novapdf.com)