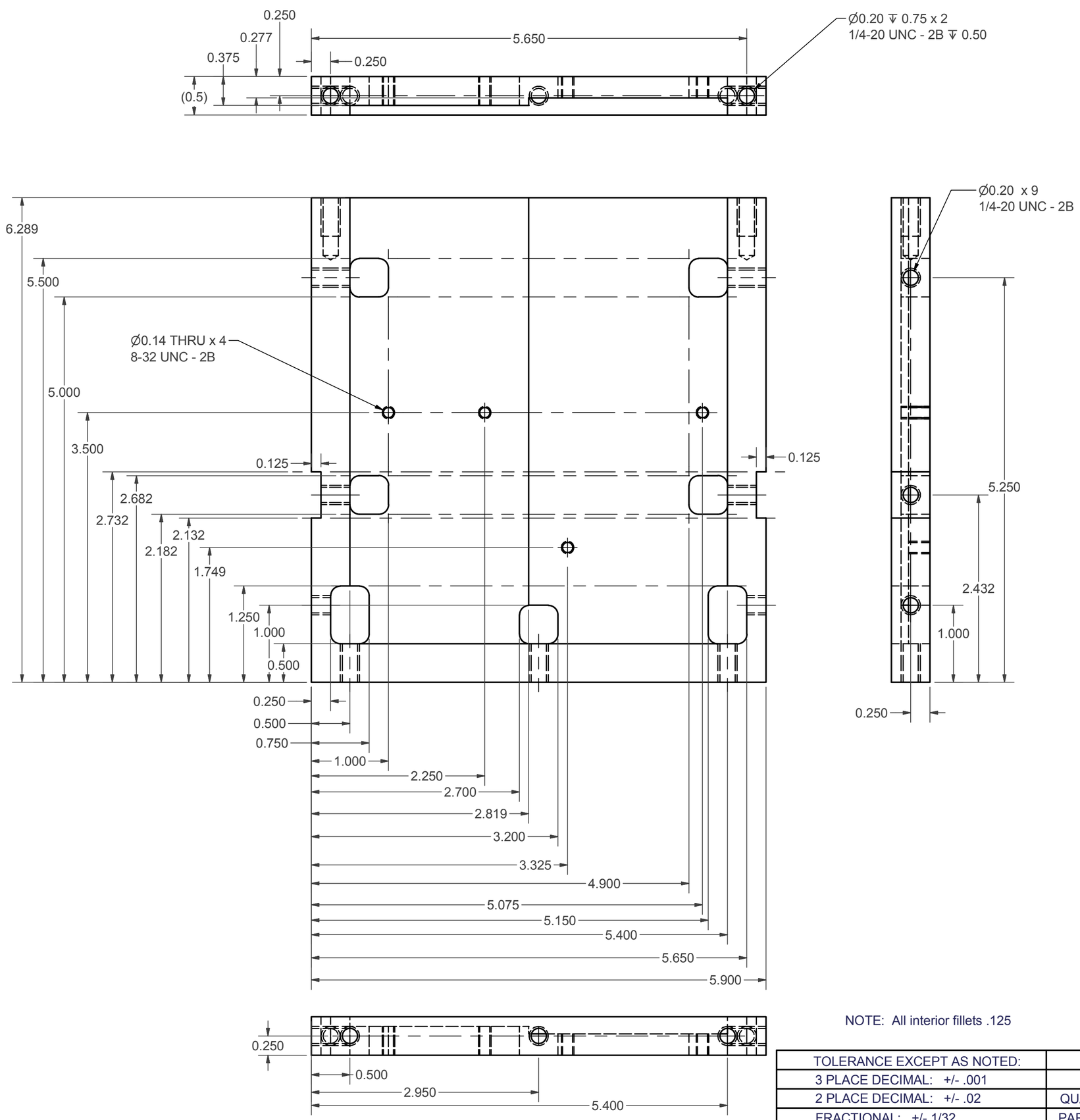

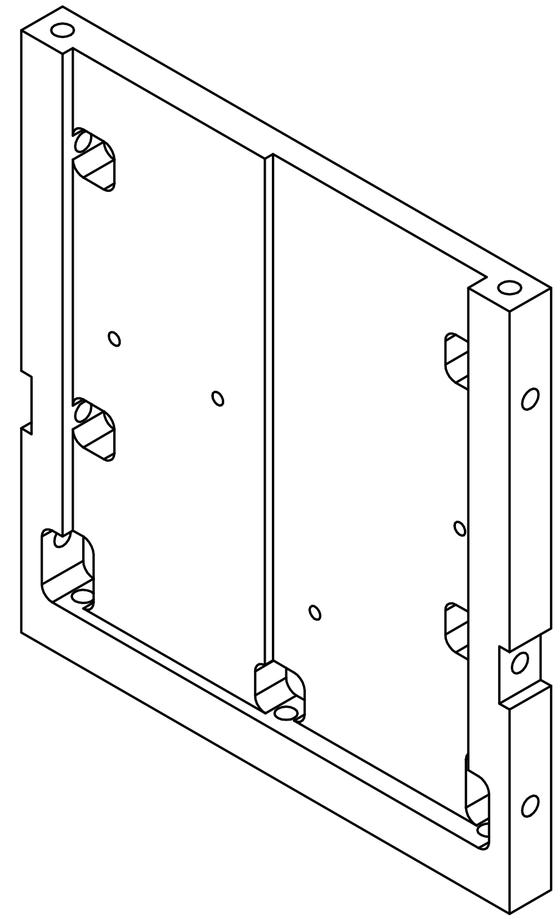

Approval For Manufacture	
Position	Signature
Designer:	
Team 2nd:	
ECE Advisor:	
ME Advisor:	

NOTE: All interior fillets .125

TOLERANCE EXCEPT AS NOTED:	Cell Retainer Negative End	MATERIAL: 6 x 7 x 0.5 Aluminum
3 PLACE DECIMAL: +/- .001		DWG.#: L16-TSV-2.1 REV. 1
2 PLACE DECIMAL: +/- .02	QUANTITY NEEDED: 1	FILENAME: L16-TSV-2.1.ipt
FRACTIONAL: +/- 1/32	PART NO: L16-TSV-2	DRAWN BY: Ben Prevoznak
DEBUR ALL SHARP EDGES	LAFAYETTE COLLEGE ENGINEERING DIVISION	SCALE: 1:1 DATE: 3/10/16