= PROBLEM/ERROR

= Potential Design Improvement (Not necessary)

= Suggestions, probably not worth fixing.

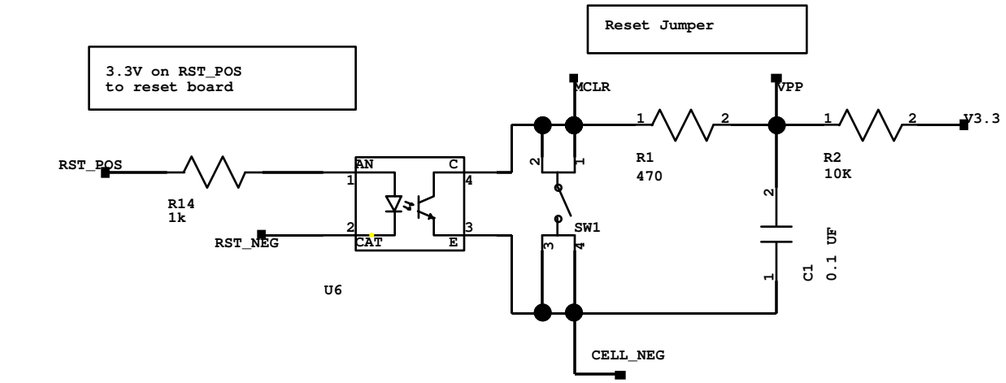

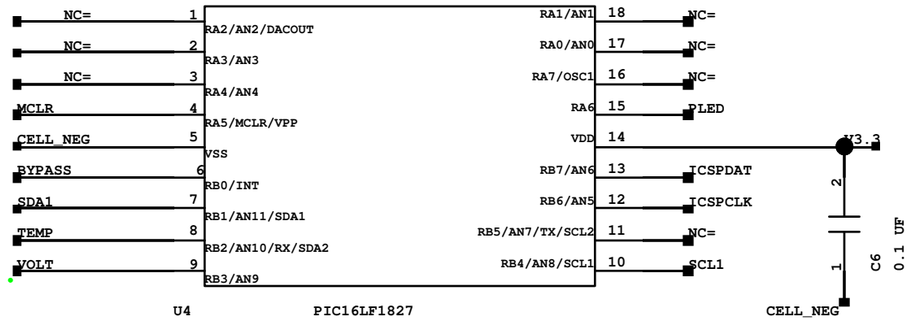

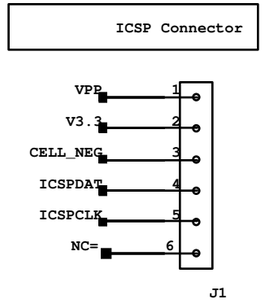

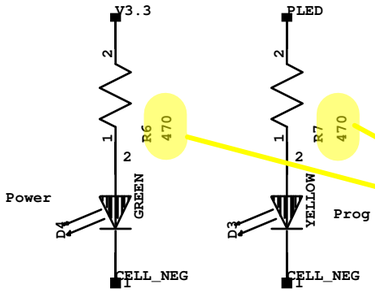

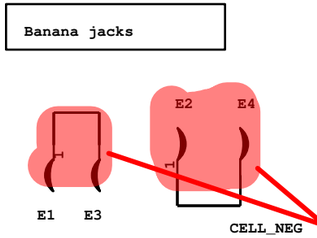

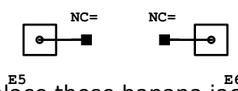

Why not replace these banana jacks with 6-32 machine screws on risers/offsets?

Tap a thread into the bus bars, this woul allow secure attachment in the final vehicle. Banana Jacks could still be used for testing purposes.

Increasing the resistance of these LEDs helps to increase the efficiency of the system

1K - 1.5K range is a good compromise

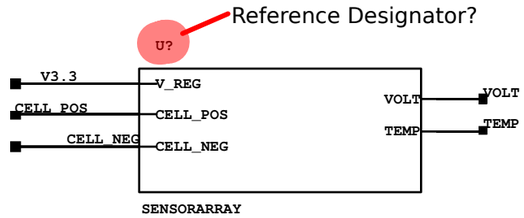

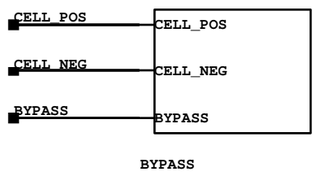

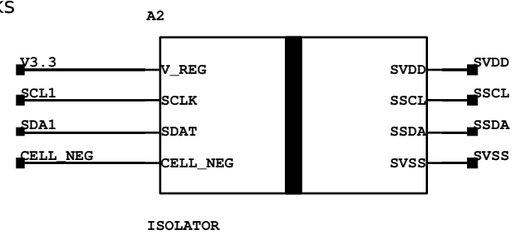

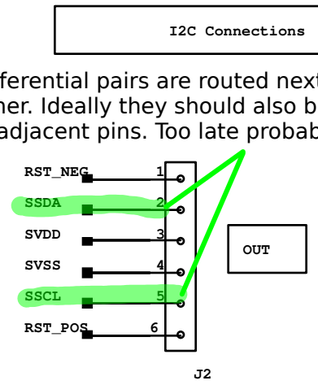

Usually Differential pairs are routed next to each other. Ideally they should also be placed on adjacent pins. Too late probably.

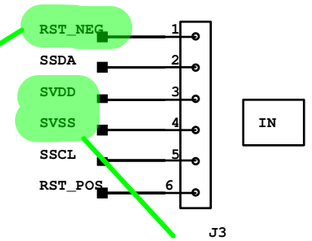

What is the point of having a RST_NEG signal? Shouldn't this always be connected to GND?

Might be useful to use this pin instead as an ~ENABLE signal to shut of the LT1307 and save power

Good practice to separate VDD and GND

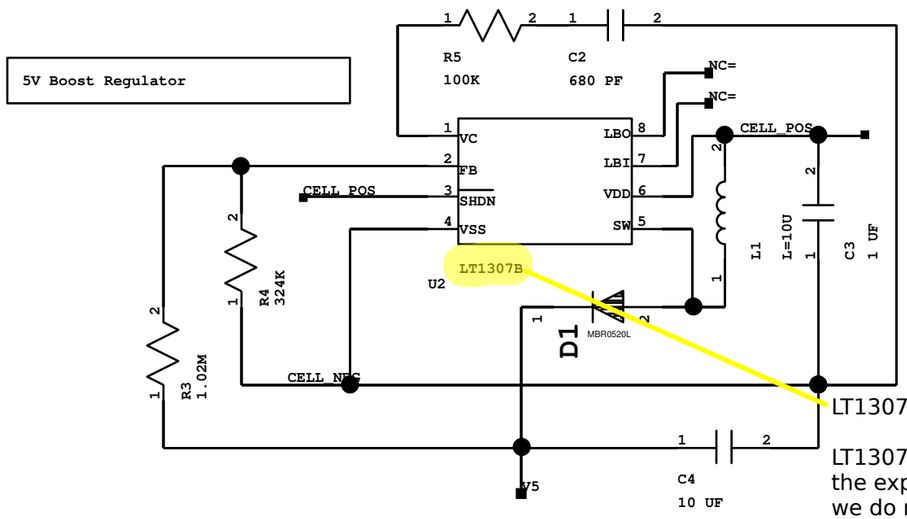

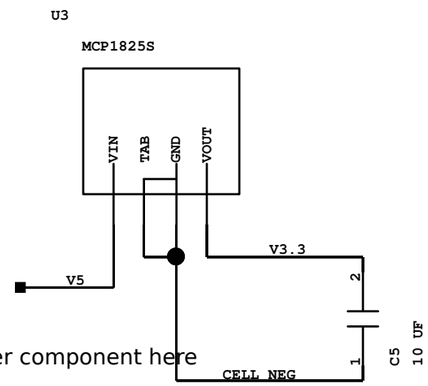

LT1307 would be a better component here

LT1307B has burst mode for tighter regulation at the expense of efficiency. Because of the LDO, we do not need tight regulation.

LAFAYETTE

Lafayette College
Easton, PA
ECE Department

TITLE: bmstop

Annotations by John Gehrig

SIZE	DWG NO	PROJECT	REV
B		LFEV-ESCM	1

DRAWN BY	COURSE	SHEET	of	
BEN RICHARDS	ECE492	1	4	15-04-2015_17:16

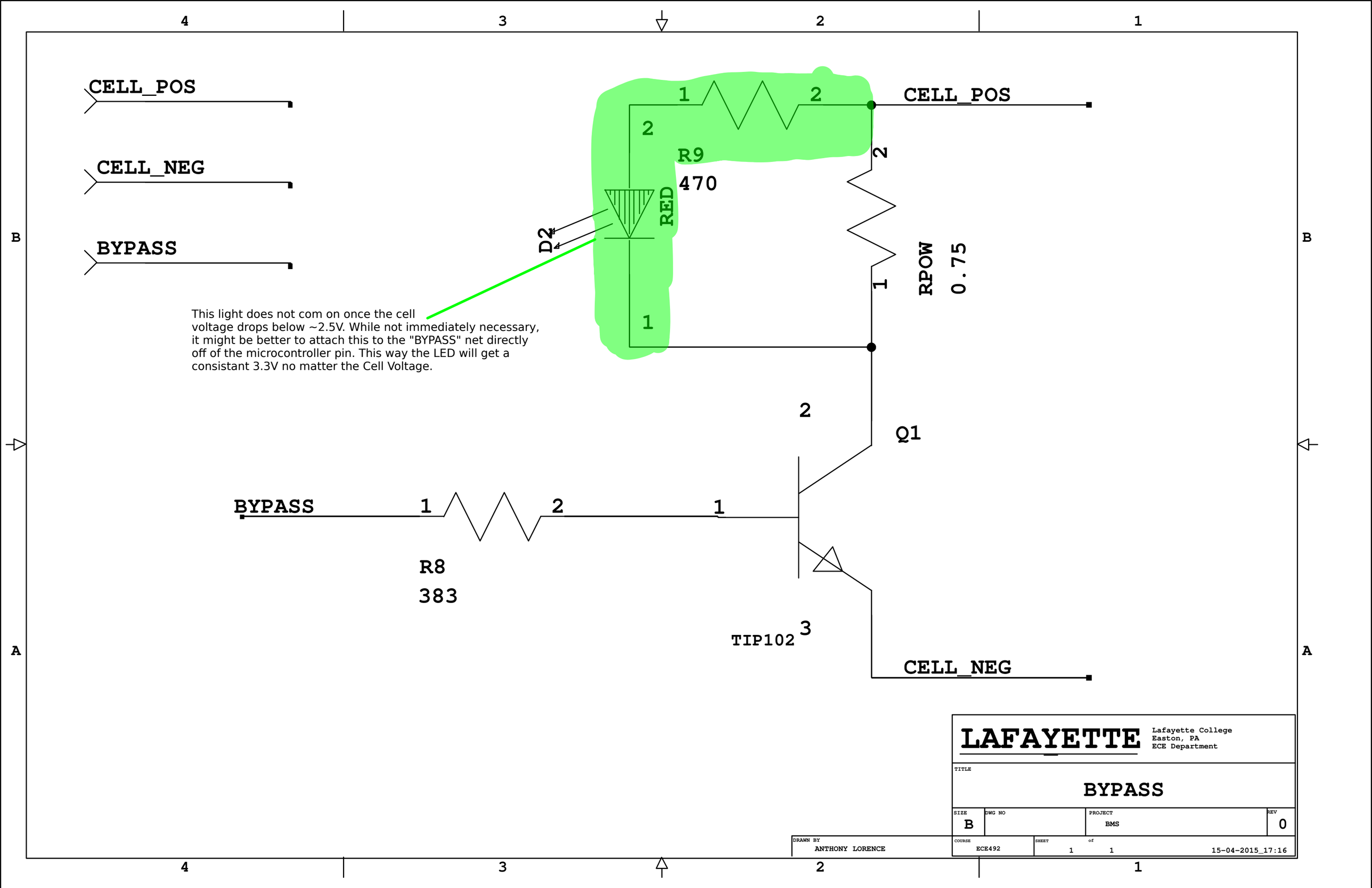
CELL_POS
CELL_NEG
BYPASS
R9
470
RED
D2
RPOW
0.75
Q1
TIP102
R8
383
CELL_POS
CELL_NEG
BYPASS
This light does not com on once the cell voltage drops below ~2.5V. While not immediately necessary, it might be better to attach this to the "BYPASS" net directly off of the microcontroller pin. This way the LED will get a consistant 3.3V no matter the Cell Voltage.
LAFAYETTE
Lafayette College
Easton, PA
ECE Department
TITLE
BYPASS
SIZE
B
DWG NO
PROJECT
BMS
REV
0
DRAWN BY
ANTHONY LORENCE
COURSE
ECE492
SHEET
1
of
1
15-04-2015_17:16

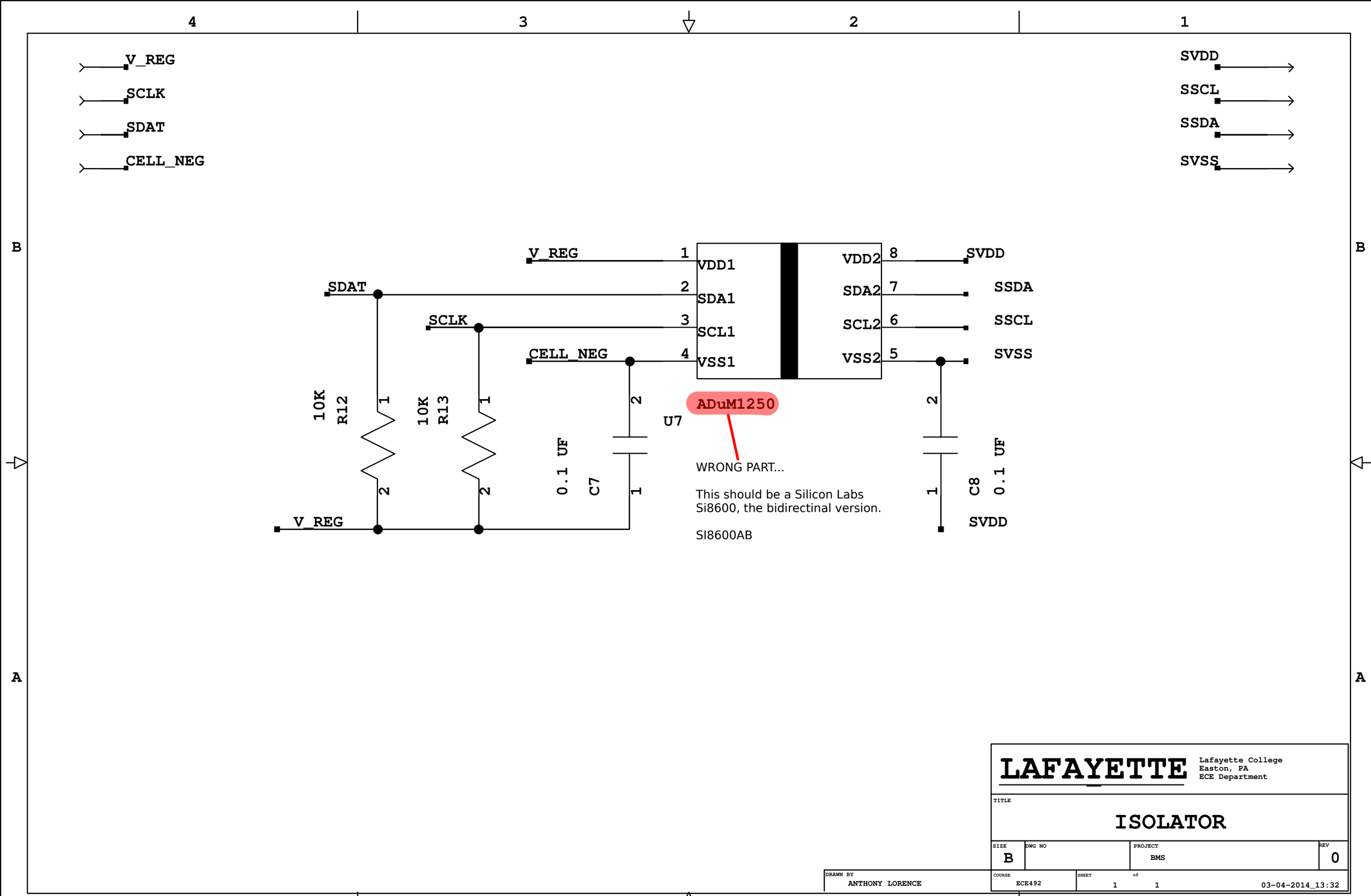
V_REG
SCLK
SDAT
CELL_NEG
SVDD
SSCL
SSDA
SVSS
V_REG
SDAT
SCLK
CELL_NEG
1 VDD1
2 SDA1
3 SCL1
4 VSS1
VDD2 8
SDA2 7
SCL2 6
VSS2 5
SVDD
SSDA
SSCL
SVSS
ADuM1250
U7
10K R12
10K R13
0.1 UF C7
0.1 UF C8
V_REG
SVDD
WRONG PART...
This should be a Silicon Labs Si8600, the bidirectinal version.
SI8600AB
LAFAYETTE
Lafayette College
Easton, PA
ECE Department
TITLE
ISOLATOR
SIZE B
DWG NO
PROJECT BMS
REV 0
DRAWN BY ANTHONY LORENCE
COURSE ECE492
SHEET 1 of 1
03-04-2014_13:32

CELL_POS

CELL_NEG

V_REG

1.8V Max — VOLT

1.8V Max — TEMP

Sub MCP6232 if
MCP6242 out of stock

Cell Voltage Divider
Scale Factor = 1/3
Cell Voltage Range 0-6 V

Voltage Sensor
Unity Buffer

Temperature Sensor and Unity Buffer

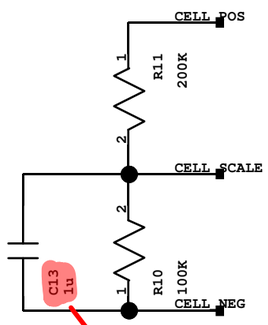

This component is actually C11...

The silkscreen is not visible on the PCB, the compnent is next to the U1 op-amp

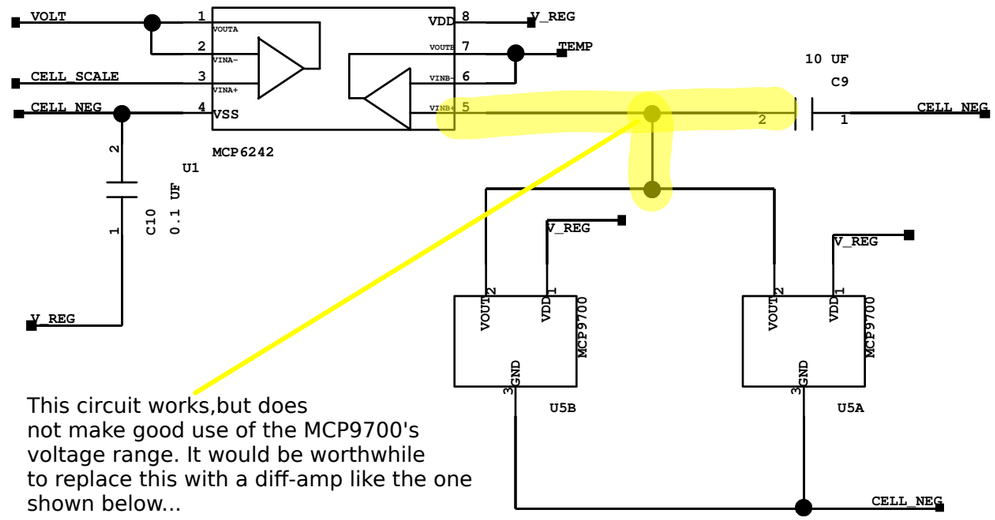

This circuit works,but does not make good use of the MCP9700's voltage range. It would be worthwhile to replace this with a diff-amp like the one shown below...

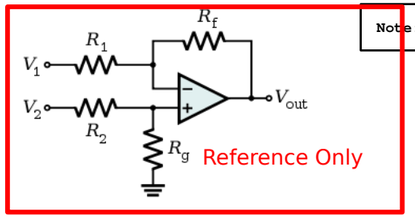

Note: Populate only one location on board

LAFAYETTE

Lafayette College
Easton, PA
ECE Department

TITLE

SENSORARRAY

SIZE	DWG NO	PROJECT	REV
B		BMS	0

DRAWN BY	COURSE	SHEET	of	
ANTHONY LORENCE	ECE492	1	1	15-04-2015_17:30