Acceptance Test Plan Draft - TSV

ECE 492 - Spring 2015

Abstract

The Acceptance Test Plan defines the necessary test procedures to be used in order to verify all functional requirements and specifications for the integrated Lafayette Formula Electric Vehicle (LFEV-2015) system are met. Each requirement can be proven to be met through analysis, test, and/or inspection where appropriate. A list of additional documents used to verify the system as well as the full list of deliverables is included in this document.

Revision 1.0.0
Hansen Liang

Table of Contents

(Insert Table of Contents here)

Executive Summary

The TSV system, providing the high power for the tractive system on the Lafayette Formula Electric Vehicle (LFEV), is a critical component of the overall system and accounts for a large portion of the safety and reliability of the vehicle. The TSV system must be tested and verified with the criteria outlined in this document to ensure delivery of solutions to all scoped requirements.

Deliverables

Item	Description	P/F	Date	Signature
List of Deliverables (from LFEV-Y3-2015 Statement of Work)				
D000	PDR Materials			
D001	CDR Materials			
D002	Users Manual			
D004	Acceptance Test Plan			
D005	Acceptance Test Report			
D006	QA Audit Report			
D009	Conference Paper, Presentation, and Video			
D010	Project Poster			
D011	Calibration and Accuracy Analysis			
D012	Maintainability Plan			
D013	Individual Research Report			
D014	Project Management and Status Letters			

Test Configurations

The configurations shown below are specifically set up for the tests performed on the TSV system. A complete configuration of the LFEV system can be found in the ICD (Interface Control Document) with detailed descriptions.

Configuration A

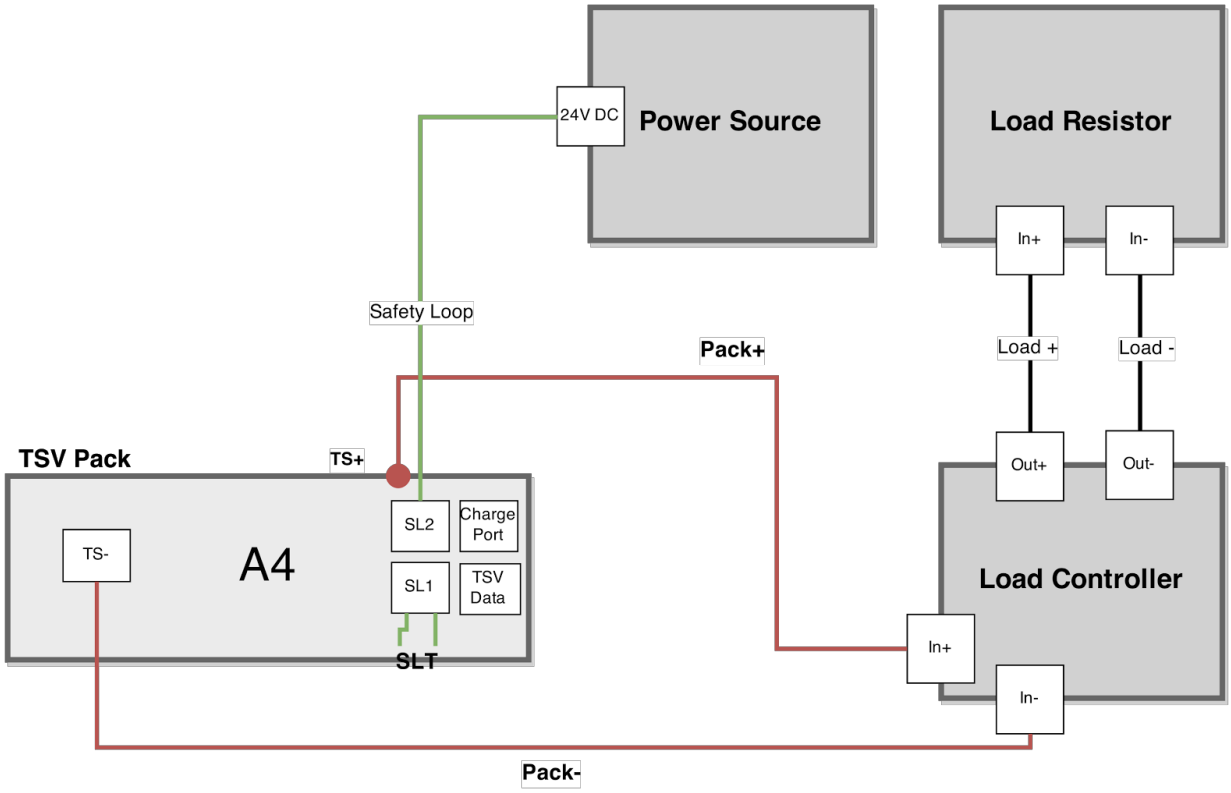

Configuration B

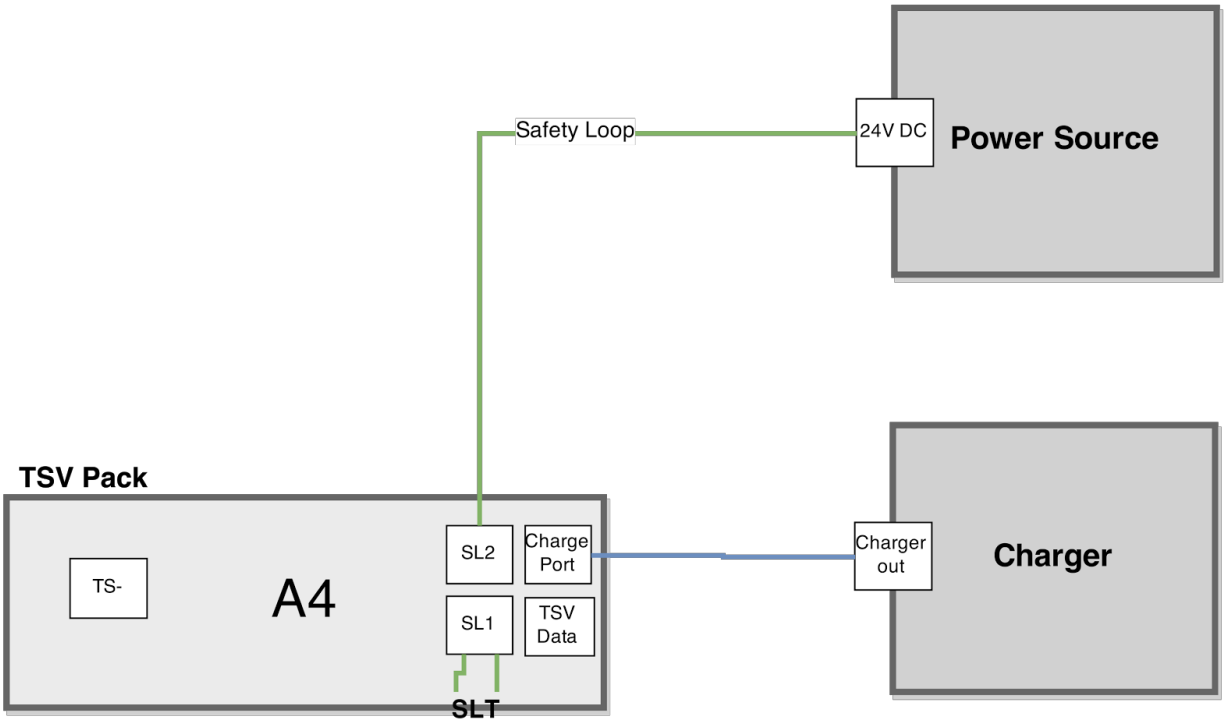

Configuration C

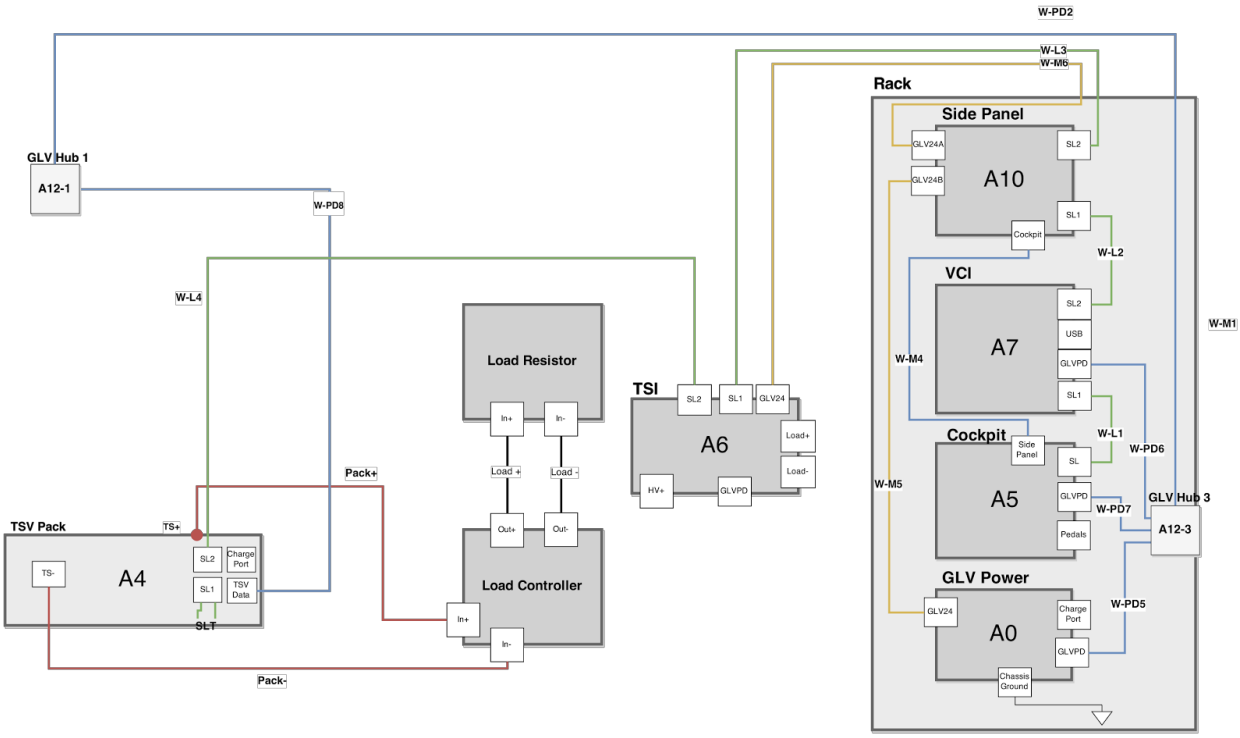

Requirements

Requirement	Description	Functional Requirement/Interface	MET
Formula Hybrid Rules			
1.2.1	The maximum permitted operating voltage for Formula Hybrid is 300 V.	Measured from tractive system measuring points. These have yet to be created.	Yes, by logic.
1.2.4	The tractive and GLV system must be galvanically isolated from one another	Any connections from TSV system to GLV or to VSCADA must be made using galvanically isolated cables. Also the insulation between the systems will be monitored by the IMD	T000
1.2.5	The tractive system must be completely electrically isolated from the chassis and any other conductive parts of the car.	Tractive system voltage will only be available through the TSMP and the TSV + and - terminals.	T000
1.3	All Electrical insulating materials used must be UL recognized, be rated for the maximum expected operating temperatures at the location of use or have a minimum temperature rating of 90C. (Whichever is greater)	Each wire used will be documented and cross-checked with UL database. Additionally, there will be temperature readings taken throughout testing, and these will be cross-referenced with the UL database.	Inspection
3.1	Accumulators used must be either batteries or capacitors. Not including molten salt batteries, thermal batteries, fuel cell, atomic and flywheel mechanical batteries	LiFePO4 batteries have been used. We will provide the documentation from the manufacturer's site to show that they follow all of the requirements.	Yes, we use LiFePO4 batteries.
3.2	All batteries or capacitors which store the tractive system energy must be enclosed in (an) accumulator container(s). Spares must be copies of the replaced packs. If the accumulator container(s) is not easily accessible during Electrical Tech Inspection, detailed pictures of the internals taken during assembly	4 accumulator packs will be created for the purposes of competition. They will have a sliding window pane or similar mechanically operated access panel so that it can be easily inspected. There will be no spares in the current design plan.	Inspection

	must be provided.		
3.3.1	The poles of the accumulator stack(s) and/or cells must be electrically insulated from the inside wall of the accumulator container by insulating material rated for the maximum voltage of the tractive system. All conductive surfaces on the outside of the container must have a low-resistance connection to the GLV system ground.	Will check that the connectors for the poles coming out of the accumulator box are rated for the maximum voltage and current coming from the pack by checking the manufacturer's specifications. The conductive parts of the battery pack will rest on the chassis of the car, which the GLV system is grounded to.	Inspection
3.3.2	Every accumulator container must contain at least one fuse.	Currently there are fuses protecting the AIRs in the pack.	Inspection
3.3.3	All batteries or capacitors that make up the accumulator must be divided into accumulator segments. A Segment Maintenance Disconnect (SMD) must be installed between each segment.	Each pack is only approximately 24V so by putting a SMD only between each pack, the specification for competition is met. This is already fulfilled through the current plan for the high voltage disconnect (HVD). However, we still must check that each segment contains less than the maximum 12MJ of energy.	Yes, logic
3.3.4	The SMD may be implemented with a switch or a removable maintenance plug. There must be a positive means of securing the SMD in the disconnected state; for example, a lockable switch can be secured with a padlock or simply a clip.	The current SMD implemented through the HVD uses a plug which must be turned and locked into place before it is connected, so it cannot be accidentally connected.	Yes, logic/inspection
3.3.5	Contacting / interconnecting the single cells by soldering in the high current path is prohibited.	No soldering was used on the high current path.	Yes, logic
3.3.6	Each accumulator container must have a prominent indicator, such as an LED, that is visible through a closed container and will illuminate whenever a voltage greater than 30 VDC is present at the vehicle side of the AIRs	A 20V indicator light will be created to show when tractive system voltage is present at the pack terminals. Our pack will not ever be higher than 30V so it is technically met, but it is good practice to have the 20V implementation of this.	T001, T003
3.3.7	The accumulator voltage indicator (3.3.6) must be directly controlled by voltage being present at	A non-software controller circuit will be created by the TSV team which will activate when tractive voltage is present at the poles of the pack.	Inspection

	the connectors using hard-wired electronics. (No software control is permitted). Activating the indicator with the control signal which closes the Accumulator Isolation Relays (AIRs) is not sufficient.		
3.3.8	The accumulator voltage indicator must always work, e.g. even if the container is removed from the car.	The accumulator voltage indicator will be powered by the batteries themselves, and will not be connected to the GLV system of the car.	Inspection
3.3.9	The minimum spacing or creepage distance for conductive materials at different voltages in the Accumulator shall be ⅛" over air and ¼" over surface.	When designing the new pack, these requirements will be taken into consideration.	Inspection
3.5	At least two "normally open" isolation relays must be installed in every accumulator container, one at each pole. If these relays are open, no TSV may be present outside of the accumulator container. The fuse protecting the accumulator circuit must have a rating lower than the voltage and current ratings of the isolation relays.	The current system design has this implemented already. There is one "normally open" AIR which are controlled by the PacMan and cover the + terminal of the tractive system.	Yes,
3.6	AMS must measure individual cell voltages, temperatures. If voltage measurement is interrupted, AMS must report critical voltage problem. Must measure temperature of at least 15% of cells. Any voltage or temperature errors must shutdown the IC drive system and open AIRs, reset must come from someone other than driver. AMS board must be dedicated to AMS, and must have watchdog timeout. Must have an AMS test port.	The current system measures voltage, but temperature sensing must be added. Additionally, the AMS testing port and protocol for testing must be developed. Lastly, it must be verified that critical failures of temperature or voltage will open the AIRs and shutdown the IC drive system.	T001
4.1	Electrical separation of GLV and TSV systems must be at least 1cm for non-PCB materials, and	The TSV and GLV systems will only interface where documented in the ICD, and the ICD will follow the specifications given by the Formula Hybrid rules.	Inspection

	6.4mm for PCB materials. All of this must be documented in the ESF		
4.2	All parts of the tractive system must be safely attached to the car. This includes all aspects of the the TS within the envelope of the car, and the TS being protected from collisions, as well as not protruding from the bottom of the vehicle.	This will not be scoped for this year of the project	N/A
4.3	All accessible parts of the vehicle must be within certain resistance tolerances to be considered a safe ground.	This will not be scoped for this year of the project	N/A
4.5	The Tractive System must have all of its wires properly insulated as per requirement 1.3, and must be labelled. Additionally, the TS must be enclosed and protected from water, strain, vibration and unable to be breached by a 10cm long .6cm diameter probe.	All of the cables will be checked to the manufacturer's specifications to ensure that they are appropriate. These will be labelled in plain sight. The case will be designed with the stress tests in mind, and will have minimized openings.	Inspection
4.6	Any tractive system enclosure must be labelled with a "High Voltage" sticker if its voltage exceeds 30V DC.	In each pack, the voltage does not exceed 30V, but when all packs are connected in parallel, the voltage will exceed 30V. However, for good practice, we will include the stickers.	Inspection
4.7	It must be possible to positively break the current path of the tractive system accumulator quickly by turning off a disconnect switch or removing an accessible element, fuse or connector. An interlock must open the shutdown circuit when the HVD is removed. It must be labelled HVD and operable without the use of tools. It also must be able to be secured in the disconnected state.	The current connection port for the TSV + terminal is labelled HVD and satisfies most of these requirements. This will most likely be expanded to the the overall system HVD once all of the accumulators are connected together.	Inspection
5.1	The shutdown circuit must directly carry the current driving the accumulator isolation	The AMS shutdown situations communicate with the PacMan to open the AIRs.	Analysis

	relays (AIRs). It consists of at least 2 master switches, 3 shut-down buttons, the brake-overtravel-switch, the IMD, all required interlocks and the AMS. If opened, the motor must free-spin.		
6.1	All electrical systems must be properly fused. The fuse protecting a circuit or must be physically located at the end of the wiring closest to an uncontrolled energy source.	All of the fuses and connections in the pack will be referenced to the manufacturer's specifications to ensure that every requirement is met.	Analysis
8.1	Whenever the accumulator containers are opened the accumulator segments must be separated by using the maintenance plugs and whenever the accumulator or tractive system is being worked on, only appropriate insulated tools may be used.	These are safety requirements which must be met whenever the packs are being worked on. These specifically refer only to the competition, but it is good practice to follow these guidelines anyway.	Safety Plan
8.2	These guidelines refer to safety precautions for charging the packs during competition. (See the Formula Hybrid ruels)	These are safety requirements which must be met whenever the packs are being charged. These specifically refer only to the competition, but it is good practice to follow these guidelines anyway.	Safety Plan
9.1	All teams must submit clearly structured documentation of their entire electrical system called the Electrical System Form (ESF). The ESF must illustrate the interconnection of all electric components including the voltage level, the topology, the wiring in the car and the construction and build of the accumulator(s).	As each piece of the TS is designed, it will be documented, and in the end these documents will be compiled into the ESF.	ESF document, Inspection
9.2	Teams must submit a complete failure modes and effects analysis (FMEA) of the tractive system prior to the event. (Available online)	The format and specifications for this document will follow the template online.	N/A, We are not competing yet.
2014 LFEV Design Bugs/Errata			

R001,R004	Fix issue where pack will not charge once depleted.	This occurs, because in order to charge the cells, the AIRs must be closed. However, these are controlled by the PacMan which also derives its power from the cells. A new charging circuit must be desgned.	T002
R001,R004	Implement ambient temperature sensors in pack.	Ambient temperature sensors must be installed in the pack. These should feed information to the PacMan, which should then make that available to SCADA.	T000
R001,R004	Implement full system reset button.	Currently, all of the reset buttons are not accessible from the outside of the pack. Also they are all separate. All of the resets should be linked to a single button.	T000
R001,R004	Correct AMS board errata.	Fix the documented errata from the LFEV 2014 technical memos.	N/A
R001,R004	Implement new LCD diplay	The current LCD display only contains minimal information, and should be replaced or updated to show additional and more relevant info.	Inspection
R001,R004	Implement an indicator for low battery warning.	Currently, charge is monitored by the pack, but there is no indicator if the charge is running low. This will most likely be a simple LED.	N/A
R001,R004	Update PacMan source code to follow coding guidelines.	The current documentation for the PacMan source code is severely lacking, and this should be corrected so that future years can use it easily.	Inspection
R001,R004	Create a better charge algorithm	The current charge determination algorithm uses only voltage, and should be improved to take other factors such as temperature into account.	T002

Tests

T000: Pack Display and Safety Qualification

This test ensures that the battery meets the basic display and safety qualifications and is required before any further tests can be performed. Both the accuracy of the displayed information (which is critical for other tests and the operation overall) and the safety features are examined. The controlling and resetting of the pack elements are also tested.

Preconditions

- All AMS boards and Pack Manager components are being sufficiently powered by the current state of charge of the battery pack
- Dummy plug is placed in the charging port
- Any other connected systems outside the pack are powered off
- Software is running on the TS-7400-V2
- System is set up in test configuration A

Test Procedure

1. Perform tests for passing criteria 1-6.
2. Use the external reset button to reset the pack.
3. Perform test for passing criterion 7.
4. If the PacMan successfully reboots, perform test for passing criterion 8. Otherwise, criterion 8 is considered failed.
5. Open the pack and disconnect one power line to the PacMan computer from the Break-out Board. Attach an amp meter to it and connect the other end of the amp meter to the PacMan power input. Wait for the system to finish rebooting, then perform test for passing criterion 9.

Passing Criteria

1. The voltage value displayed on the multimeter does not exceed 26V.

Measured Voltage (V)

_____ _____ _____

Witness/Examiner Signature Date Pass/Fail

2. The absolute value of the pack current displayed on the character LCD screen is < 1A.

Displayed Pack Current (A)

_____ _____ _____

Witness/Examiner Signature Date Pass/Fail

3. The pack state of charge (SOC) displayed on the character LCD screen is between 0 and 100 % inclusive.

Displayed Pack State of Charge (%)

_____ _____ _____

Witness/Examiner Signature Date Pass/Fail

4. The measured resistance between the poles of the accumulator container and the outside wall of the pack is > 1MΩ.

Measured Resistance (Ω)

_____ _____ _____

Witness/Examiner Signature Date Pass/Fail

5. The multimeter measured voltage of the total pack voltage across the poles is within ± 0.1V of the displayed total voltage on the character LCD screen.

Measured Voltage (V)	Displayed Voltage (V)	Error (V)

_____ _____ _____

Witness/Examiner Signature Date Pass/Fail

6. The measured and displayed ambient temperature on the LCD is within +/- 5C of the value measured with a separate temperature sensor.

Displayed Temperature (C)	Measured Temperature (C)	Error (C)

_____ _____ _____

Witness/Examiner Signature Date Pass/Fail

7. TS-7400-V2's software begins automatically after the reset switch is pressed and the computer boots itself up again. The LCD should start displaying information within 2 minutes. All AMS boards also restart and resume working.

_____ _____ _____

Witness/Examiner Signature Date Pass/Fail

8. When the TS-7400-V2 reboots, all AMS boards' LEDs should turn on one by one in succession and then turn off. This is a routine procedure the PacMan performs after each restart to demonstrate that all AMS boards can be put into bypass mode at its command.

_____ _____ _____

Witness/Examiner Signature Date Pass/Fail

9. Measure the current flowing through the PacMan computer. When the reading is steady, it should not exceed 60 mA. This ensures that the PacMan computer is not draining the battery at a more significant rate than expected.

_____ _____ _____

Witness/Examiner Signature Date Pass/Fail

T001: Low Current Discharge Test

This test will simulate a discharge cycle of the battery pack and exercise the safety features of the pack which will be utilized when the voltage in the pack reaches critical levels. It also tests the accuracy of the state of charge algorithm and un-balances some cells so the cell-balancing algorithm to be tested.

Preconditions

- All BMS boards and Pack Manager components are being sufficiently powered by the current state of charge of the battery pack
- A load is connected, use the actual system setup (with motor, etc) if possible
- Dummy plug is placed in the charging port
- Software is running on the PackMan computer
- T000 must be performed and passed before this test can be carried out, unless explicit instructor permission is given
- The pack state of charge displayed is between 40% and 70%
- System is set up in test configuration A

Test Procedure

1. Open one AIR or both AIRs in the pack.
2. Perform test for passing criterion 1.
3. Bypass 3 of the cells and leave them to discharge 8-12% of their charge on average (method TBD).
4. Connect both terminals of the pack to the resistive load.
5. Heat up a temperature sensor on an AMS board beyond the safe threshold, and perform test for criterion 2.
6. After the temperature returns to the normal range, wait for safety loop to close and begin discharge again.
7. Use an external voltage source to manipulate the voltage measurement of an AMS board beyond the set high threshold, and repeat test for criterion 2.
8. Wait for safety loop to close and start discharging again.
9. Perform test for passing criteria 3-7.
10. Allow the discharging to continue until the safety loop is opened when the pack voltage reaches its configured lower bound or the PacMan powers off because of the complete depletion of the pack.
11. Perform test for passing criteria 8-10. Criterion 8 ensures that the battery pack does not drain itself beyond the set safe limit, and that the PacMan computer is still powered while the cells are not damaged from over-discharging.

Passing Criteria

1. Resistance measurement between the pack's HV poles is > 1MΩ when at least one of the AIRs are open.

Measured Resistance (MΩ)

_____ _____ _____

Witness/Examiner Signature Date Pass/Fail

2. The LED indicators for voltage greater than 20V present at the poles is lit.

_____ _____ _____

Witness/Examiner Signature Date Pass/Fail

3. The AIRs open and a critical error is displayed on the LCD display both times.

_____ _____ _____

Witness/Examiner Signature Date Pass/Fail

4. Record all individual cell's state of charge percentage. Three of the cells should have SOC at least 8% lower than the average of the rest of the cells.

Cell #	SOC (%)

_____ _____ _____

Witness/Examiner Signature Date Pass/Fail

5. Take readings of the battery pack every 30 minutes, and record the state of charge value of the pack displayed on the LCD. The SoC displayed should be monitored when it nears the end of the discharge cycle, and the final value before it completely drains should be recorded as well as the time. There should be a relatively linear correlation between time and decreasing state of charge.

Discharge Time (Min)	LCD Displayed SoC(%)

_____ _____ _____

Witness/Examiner Signature Date Pass/Fail

6. The discharge current displayed on the LCD screen of the battery pack is within ± 1A of the drawn current displayed on the load resistor unit.

Load Resistor Displayed Current (A)	LCD Displayed Current (A)	Error (A)

_____ _____ _____

Witness/Examiner Signature Date Pass/Fail

7. The discharge voltage displayed on the LCD screen of the battery pack is within ± 1V of measured voltage across the poles.

Measured Voltage across Poles (A)	LCD Displayed Voltage (A)	Error (V)

_____ _____ _____

Witness/Examiner Signature Date Pass/Fail

7. The pack manager's LCD display shows the system is in discharge mode.

_____ _____ _____

Witness/Examiner Signature Date Pass/Fail

8. The safety loop is opened by the pack manager when a cell voltage reaches the low voltage threshold.

_____ _____ _____

Witness/Examiner Signature Date Pass/Fail

9. The TS-7400-V2's power LED is still lit when it opens the safety loop to end the discharge cycle.

_____ _____ _____

Witness/Examiner Signature Date Pass/Fail

T002: Charge Cycle Test

This test will simulate a charge cycle of the battery pack and exercise its “plug and forget” safety features, while also testing its state-of-charge algorithm and various reading accuracies.

Preconditions

- All BMS boards and Pack Manager components are being sufficiently powered by the current state of charge of the battery pack
- All loads outside the battery pack are turned off
- The charger is plugged into the wall and is powered on
- Software is running on the PackMan computer
- T000 must be performed and passed before this test can be carried out, unless explicit instructor permission is given
- T001 must be performed for the cell-balancing test to work
- System is set up in test configuration B

Test Procedure

1. Ensure the safety loop is closed.
2. Perform test for passing criterion 1.
3. Remove the dummy plug from the charging port and plug the charging cable into the charging port on the battery pack.
4. Perform tests for passing criteria 2-5.
5. Perform test for passing criterion 6.
6. Wait for the pack manager to state charging has completed.
7. Perform tests for passing criteria 7-14.
8. Disconnect the charging cable from the battery pack.
9. Perform tests for passing criteria 15.

Passing Criteria

1. Safety Loop is closed before the charging cable is plugged into the battery pack and the “dummy” plug is removed from the charging port.

_____	_____	_____
Witness/Examiner Signature	Date	Pass/Fail

2. Safety Loop is opened when the “dummy” plug is removed from the battery pack and the charging cable is plugged into the battery pack.

_____	_____	_____
Witness/Examiner Signature	Date	Pass/Fail

3. The pack manager enters the charging state when the charging cable is plugged into the battery pack by displaying a status message that the pack is charging on the LCD screen.

_____	_____	_____
Witness/Examiner Signature	Date	Pass/Fail

4. Take readings of the battery pack every 30 minutes, and record the state of charge value of the pack displayed on the LCD. Double the charge current after 3 measurements, then continue the process. The SoC displayed should be monitored when it nears the end of the charge cycle, and the final value when the charging is complete (when all AMS boards reports in bypass mode). There should be two separate relatively linear correlations for the slow and fast-charging periods.

Charge Time (Min)	LCD Displayed SoC(%)
Charge Current Doubled	

_____	_____	_____
Witness/Examiner Signature	Date	Pass/Fail

5. The charging relays are closed automatically by the pack manager to allow the battery to begin charging as shown by the drawn current on the power supply.

_____ _____ _____

Witness/Examiner Signature Date Pass/Fail

6. Safety Loop does not close during the charging cycle.

_____ _____ _____

Witness/Examiner Signature Date Pass/Fail

7. No error messages or system failures related to charging were encountered during the charge cycle.

_____ _____ _____

Witness/Examiner Signature Date Pass/Fail

8. The time to complete the charge cycle is within ±0.5 hours of the estimated time of charge based on beginning SOC reported by the pack manager.

Initial SOC (%)	Charging Current (A)	Estimated Time to Charge (Hrs)	Actual Time of Charge (Hrs)	Error (Hrs)

_____ _____ _____

Witness/Examiner Signature Date Pass/Fail

9. The LCD screen on the battery pack display a status message indicating charging has completed successfully.

_____ _____ _____

Witness/Examiner Signature Date Pass/Fail

10. The LCD screen displays an SOC of 100 ± 1 % when the pack manager indicates the battery pack is fully charged.

_____ _____ _____

Witness/Examiner Signature Date Pass/Fail

11. The charge relays are opened automatically when the pack manager indicates the battery pack is fully charged.

_____ _____ _____

Witness/Examiner Signature Date Pass/Fail

12. The three extra-discharged cells should now be closer to the other cells' state of charge percentage than recorded in T001.

Cell #	Initial SOC measured in T001 (%)	New SOC after charge cycle (%)

_____ _____ _____

Witness/Examiner Signature Date Pass/Fail

13. Safety Loop is open after the charging cycle has completed but before the charger cable has been removed from the battery pack.

_____ _____ _____

Witness/Examiner Signature Date Pass/Fail

14. Pack manager enters shows that it enters the discharging state after charging completes.

_____ _____ _____

Witness/Examiner Signature Date Pass/Fail

15. Safety Loop is closed after the charging cable is removed from the battery pack, the "dummy" charge plug is inserted into the charging port.

_____	_____	_____
Witness/Examiner Signature	Date	Pass/Fail

T003: High/Low Current Discharge Test

This test will simulate a discharge cycle of the battery pack under the maximum current load and exercise the safety features of the pack which will be utilized when the voltage in the pack reaches critical levels. It also checks the accuracy of the state of charge algorithm by using different rates of discharging and proving that the SoC tracks correctly.

Preconditions

- All BMS boards and Pack Manager components are being sufficiently powered by the current state of charge of the battery pack
- A load is connected, use the actual system setup (with motor, etc) if possible
- All systems outside of the battery pack are powered off
- Dummy plug is placed in the charging port
- Software is running on the PackMan computer
- T000 must be performed and passed before this test can be carried out, unless explicit instructor permission is given
- System is set up in test configuration C if all components are available. Otherwise it should be set up in configuration A.

Test Procedure

1. Ensure that all safety systems are enabled and press the “reset safety loop” button.
2. Perform test for passing criterion 1.
3. Close the load controller relays to connect the battery pack HV terminals to the resistive load and adjust it until the output current is 200A. Start taking measurements for passing criterion 6.
4. Perform test for passing criteria 2-5, this process should not take longer than 5 minutes.
5. Change the discharging current to 150A by manipulating the load controller. Discharge until the SoC displayed reaches 40%.
6. Pause the discharging by turning off the load for 30 minutes. Take measurements for SoC at the start and end of the pause for criterion 6.
7. Resume the discharging with current set to 50A.
8. Allow the discharging to continue until the safety loop is opened when the pack voltage reaches its configured lower bound or the PacMan powers off because of the complete depletion of the pack.
9. Perform test for passing criteria 7.

Passing Criteria

1. The safety loop is closed when the “reset safety loop” button is pressed.

   _____ _____ _____
   Witness/Examiner Signature Date Pass/Fail

2. The LED indicator for voltage greater than 20V present at poles is lit.

   _____ _____ _____
   Witness/Examiner Signature Date Pass/Fail

3. The discharge current displayed on the LCD screen of the battery pack is within ± 1A of the drawn current displayed on the load resistor unit.

Load Resistor Displayed Current (A)	LCD Displayed Current (A)	Error (A)

   _____ _____ _____
   Witness/Examiner Signature Date Pass/Fail

4. The discharge voltage displayed on the LCD screen of the battery pack is within ± 1V of measured voltage across the poles.

Measured Voltage across Poles (A)	LCD Displayed Voltage (A)	Error (V)

   _____ _____ _____
   Witness/Examiner Signature Date Pass/Fail

5. The discharge fuse remains intact and not blown during the 200A current discharge cycle.

   _____ _____ _____
   Witness/Examiner Signature Date Pass/Fail

6. Take readings of the battery pack every 5 minutes (unless otherwise specified in the table), and record the state of charge value of the pack displayed on the LCD. The SoC displayed should be monitored when it nears the end of the discharge cycle, and the final value before it completely drains should be recorded as well as the time. The data points should then be plotted and each section (with a unique discharge rate, zero for the pause) should be relatively linear while the overall curve spans from above 95% to below 5%.

Discharge Time (Min)	LCD Displayed SoC(%)
Initial SoC	
200A Discharge	
150A Discharge Starts	
Discharge ends/pause	
50A Discharge Starts (measure each 20 min)	

_____ _____ _____

Witness/Examiner Signature Date Pass/Fail

7. The safety loop is opened by the pack manager when a cell voltage reaches the low voltage threshold.

_____	_____	_____
Witness/Examiner Signature	Date	Pass/Fail